ETAS RTA-RTE v12.7.2

Status: FINAL

Getting Started Guide

www.etas.com

Copyright

The data in this document may not be altered or amended without special notification from ETAS GmbH. ETAS GmbH undertakes no further obligation in relation to this document. The software described in it can only be used if the customer is in possession of a general license agreement or single license. Using and copying is only allowed in concurrence with the specifications stipulated in the contract.

Under no circumstances may any part of this document be copied, reproduced, transmitted, stored in a retrieval system or translated into another language without the express written permission of ETAS GmbH.

© Copyright 2025 ETAS GmbH, Stuttgart

The names and designations used in this document are trademarks or brands belonging to the respective owners.

ETAS RTA-RTE 12.7.2 - Getting Started Guide R01 EN – 05.2025

Contents

1 Introduction 4

1.1 Who Should Read this Manual? 4

2 Installing RTA-RTE on Windows 5

2.1 Prerequisites 5

2.2 What is Installed 5

2.3 Interactive Installation 6

2.4 Unattended Installation 6

2.5 Copy-installation 7

2.6 Licensing 7

3 Building an Example Application 10

3.1 Application Behavior 10

3.2 Installation Contents 11

3.3 Building the application 11

4 Documentation 14

5 ETAS Contact Addresses 15

5.1 Technical Support 15

5.2 General Enquiries 15

1 Introduction

Welcome to RTA-RTE (Run-Time Environment).

RTA-RTE is the ETAS AUTOSAR RTE Generator Product. The main component of RTA-RTE is the generator tool, on Windows `bin/RTEGen.exe` on Linux `bin/RTEGen`. It parses and generates RTEs according to AUTOSAR 4.0.x.

RTA-RTE provides a communication infrastructure and real-time scheduling for all Application Software components, and an interface between Application Software components and Basic Software modules. RTA-RTE generates glue code for AUTOSAR ECUs, passing control between Application and Basic Software components.

Distributions of RTA-RTE also include the RTE library and an example application.

This guide describes how to install RTA-RTE on Windows and provides a simple example input model so that you can verify that the installation has been successful and the product is functioning correctly.

More detailed information on using RTA-RTE can be found in the separate RTA-RTE User Guide.

1.1 Who Should Read this Manual?

You are a trained embedded systems developer or systems integrator familiar with AUTOSAR concepts who wishes to generate an AUTOSAR Run-Time Environment either to integrate an ECU or to deliver a software component to a downstream integrator.

As an ECU integrator it is essential that you understand how to build the AUTOSAR OS on your chosen target platform. If you have taken delivery of an ETAS RTA-OS then it is strongly recommended that you read the RTA-RTE Getting Started Guide for the OS first and commission the OS on your chosen target.

You should read this guide before installing RTA-RTE and before you read the other manuals.

2 Installing RTA-RTE on Windows

There are two key components to RTA-RTE:

- RTA-RTE Program, libraries, documentation and (optionally) example,
- ETAS License Manager (LiMa)

The method of installing RTA-RTE depends on whether your have local admin rights. Both methods are explained later in this chapter.

RTA-RTE itself does not write to the registry and does not require local admin rights. It can be copied from one location or machine to another without problem, as long as the target machine has a suitable license. RTA-RTE only cares about the relative locations of the files and subdirectories under the installation folder.

The installer for the ETAS License Manager does need to write to the registry, so the RTA-RTE installer does require admin rights. See below for installation methods without admin rights.

If you need to install more than one version of RTA-RTE, simply install them into different folders and make sure your build script points to the correct one at the code-generation step.

2.1 Prerequisites

2.1.1 ETAS License Manager

The installer for RTA-RTE can optionally install the ETAS License Manager at the same time.

- If you already have LiMa installed (*e.g.* you have other ETAS software installed that uses it) then you do not need to install LiMa.
- If your organization has already made arrangements for licensing ETAS products as part of a centralized rollout scheme, then you may not need to install LiMa.
- If you do not have local admin rights then you cannot install LiMa.

2.1.2 Other Dependencies

While it is possible to install RTA-RTE without having the following items in place, it is strongly recommended to install them at the same time as RTA-RTE.

- a PDF reader is needed to open the documentation files
- a license from ETAS is needed to run RTA-RTE

2.2 What is Installed

The RTA-RTE installer will install:

`bin`	The RTE generator executable and associated libraries.
`bin/Templates`	RTE library and report template files.

`Documents`	RTA-RTE Documentation including RTA-RTEuserguide and RTA-RTErefguide.
`External/AUTOSARxy`	RTA-RTE external definitions (including AUTOSAR defined header files) appropriate to AUTOSAR release *x.y*. There is one folder for each AUTOSAR release supported by RTA-RTE.
`Inc`	Non-generated RTA-RTE header files (used by both the generated RTE library and generated source files).
`Example`	RTE example applications for AUTOSAR release 4.0.3.

Optionally, the RTA-RTE installation disk image will also install the ETAS License Manager (This is not necessary if you already have made licensing arrangements, *e.g.* you already have ASCET or INCA installed).

2.3 Interactive Installation

If you will be present during the installation then you should use this method.

RTA-RTE is supplied as an "Installation disk image" folder structure containing the RTA-RTE installer itself, documentation, and the ETAS License Manager (LiMa) installer.

To start the installation from the disk image, run `autostart.exe`. This will open the interactive installer. Install RTA-RTE by following the onscreen links.

During the install, you will be given the option to change the folder to which RTA-RTE is installed. This can be any folder on the system.

By default, the interactive install does not install LiMa. If you require it, check the box when you are asked what components you require.

2.4 Unattended Installation

This method is not interactive and can be executed from a script.

The installer `Installer.exe` is in the `RTE-RTE` folder of the installation disk image.

To install without any interactive dialogs, execute the installer directly using one of the following command-line switches:

- `RTA-RTE\Installer.exe /SILENT`—RTA-RTE is installed without interactive dialogs. Install progress dialog boxes are displayed.
- `RTA-RTE\Installer.exe /VERYSILENT`—as `/SILENT` but progress dialog boxes are suppressed too.

When used in this way the installation can be controlled using the following command-line options:

- By default, RTA-RTE will be installed in `C:\ETAS\RTA-RTE`. To change this, use the `/DIR` option, for example, `/DIR=D:\ETAS\RTE5.7`.
- By default, RTA-RTE will install without the ETAS License Manager. To install with the ETAS License Manager, use `/TYPE=full`. This will only work if you have local admin rights.

2.5 Copy-installation

This method does not require local admin rights, but does not install ETAS License manager, so it is necessary to make separate arrangements to make sure ETAS License Manager is installed.

If you already have the ETAS license manager installed, then you can simply copy RTA-RTE from another computer. For example, if you originally installed RTA-RTE to `C:\ETAS\RTA-RTE` on one machine, then you can simply zip up the `RTA-RTE` folder and unzip it on another machine, *e.g.* in `D:\work\AUTOSAR\RTA-RTE` and it will work fine, subject to the correct license being installed.

2.6 Licensing

RTA-RTE is protected by license keys installed using the ETAS License Manager. You must have a valid license key for each RTA-RTE feature that you use. If you require a license, please request a license using the ETAS License Manager or contact ETAS GmbH.

> **NOTE**
>
> Please consult the release notes for feature names used by this release of RTA-RTE.

License keys for RTA-RTE are normally locked to the MAC address of the Ethernet controller in your host PC. Other licensing options are available. Please contact ETAS to find out more and to discuss your licensing needs.

2.6.1 ETAS License Manager

Node locked licenses are supplied in an ASCII text file, which will be sent to you on completion of a valid license agreement. Until a valid license is installed the ETAS License Manager will display the RTA-RTE license state as “NOT AVAILABLE” and the backend processors will not run.

The license file is installed onto your host PC using the ETAS license manager. This can be performed using the `File`→`Add License File` menu:

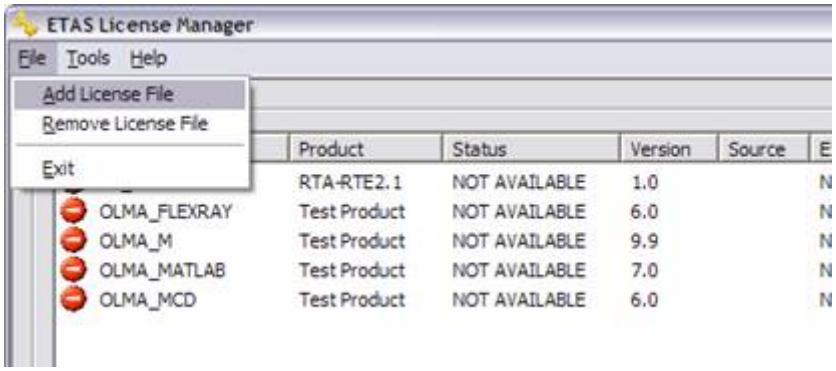

Figure 2.1.Add License File to ETAS License Manager

When a valid license has been installed, ETAS License Manager will display the license version, status, expiration date and source, for example:

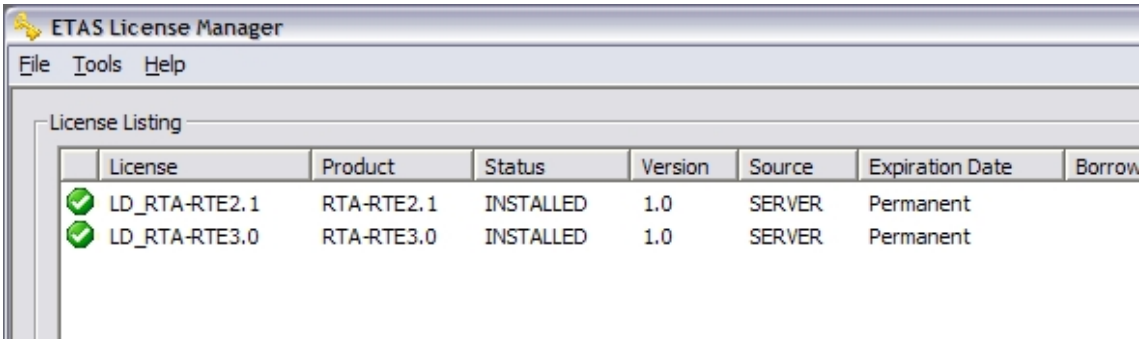

Figure 2.2.Valid installation of license feature LD_RTA-RTE2.1

2.6.2 Verifying the License

You can verify that the license is working using the `--test-license` command line option for the RTE generator:

```
C:\> RTEGen --test-license
```

RTA-RTE will attempt to check out a license. If it succeeds, it will display the License Feature and Expiry Date, for example:

```
Feature: RTA-RTE
Expiry: 31-Dec-2023
```

If the license cannot be found or is not valid then the ETAS License Manager is opened for you to add a valid license file.

When the ETAS License Manager is closed, RTA-RTE continues. If there is still no valid license, RTA-RTE terminates with:

```
Could not checkout the license feature <license feature>. Please
use the ETAS License Manager to request/install a valid license.
```

2.6.3 Troubleshooting

The RTE Generator will report a Fatal Error if you try to use a feature for which a correct license key cannot be found. If you think that you should have a license for a feature but RTA-RTE appears not to work then you should follow the troubleshooting steps below before contacting ETAS:

- Check that the license can be seen by the RTE generator using the `--test-license` option.
- Check that your license keys are valid.

  You can check that your license has not expired either using the ETAS License Manager or by opening your license file in a text editor. If you have a current maintenance contract, ETAS will automatically provide you with a new license file that extends the license period prior to the license expiring.
- Check that the Ethernet MAC address (or DiskID if appropriate) matches the one specified in the license file.

  Check that the MAC address in the license file matches the MAC address of the Ethernet controller on your host PC. You can find out the MAC address of your PC either using the ETAS License Manager (Menu item `Tools`→`Obtain License Info`) or by running the Microsoft program `ipconfig /all` at a Command Prompt. The "Physical Address" reported should be identical to the MAC address in your license file.

  Check the DiskID using the DOS `dir.exe` command.
- Check that your Ethernet controller remains powered up when disconnected from the network.

  If you use a notebook and RTA-RTE stops working when you disconnect from the network then you should check your hardware settings to ensure that your Ethernet controller remains on when the network is disconnected.

If you have a current maintenance contract covering RTA-RTE and have not resolved your issues after checking these items then please contact ETAS. You should provide the contents and location of your license file and your Ethernet MAC address and/or DiskID.

3 Building an Example Application

RTA-RTE provides a simple example input model so that you can verify that your installation works.

The example comes with C code for the Software Components to show how to use the AUTOSAR RTE API.

3.1 Application Behavior

The `CaseStudy1` example application demonstrates intra-ECU sender-receiver communication with last-is-best semantics. The sender is started by a `TimingEvent` and a `DataReceivedEvent` causes activation of a `RunnableEntity` to receive the communicated data.

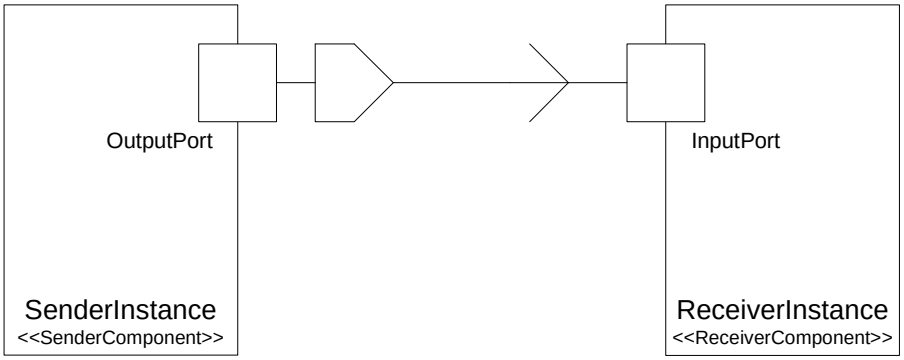

Figure 3.1.Communication within CaseStudy1 Application

The dynamic behavior of the `CaseStudy1` example application is started by a `TimingEvent`:

- `RunnableEntity` *OSTriggered* in `SwComponentPrototype` *SenderInstance* is started by a `TimingEvent` with period 1.0 seconds. RTA-RTE generates the code in the corresponding task body to invoke it. At each invocation it uses the `Rte_Write` API to send data through port *OutputPort*.
- `RunnableEntity` *InputPort_CaseStudyData* is triggered by a `DataReceiveEvent`. RTA-RTE generates code in the corresponding task body and send API to invoke it each time new data is available. The runnable uses the `Rte_Read` API to retrieve the data.

The dynamic behavior of `CaseStudy1` is shown in Figure 3.2.

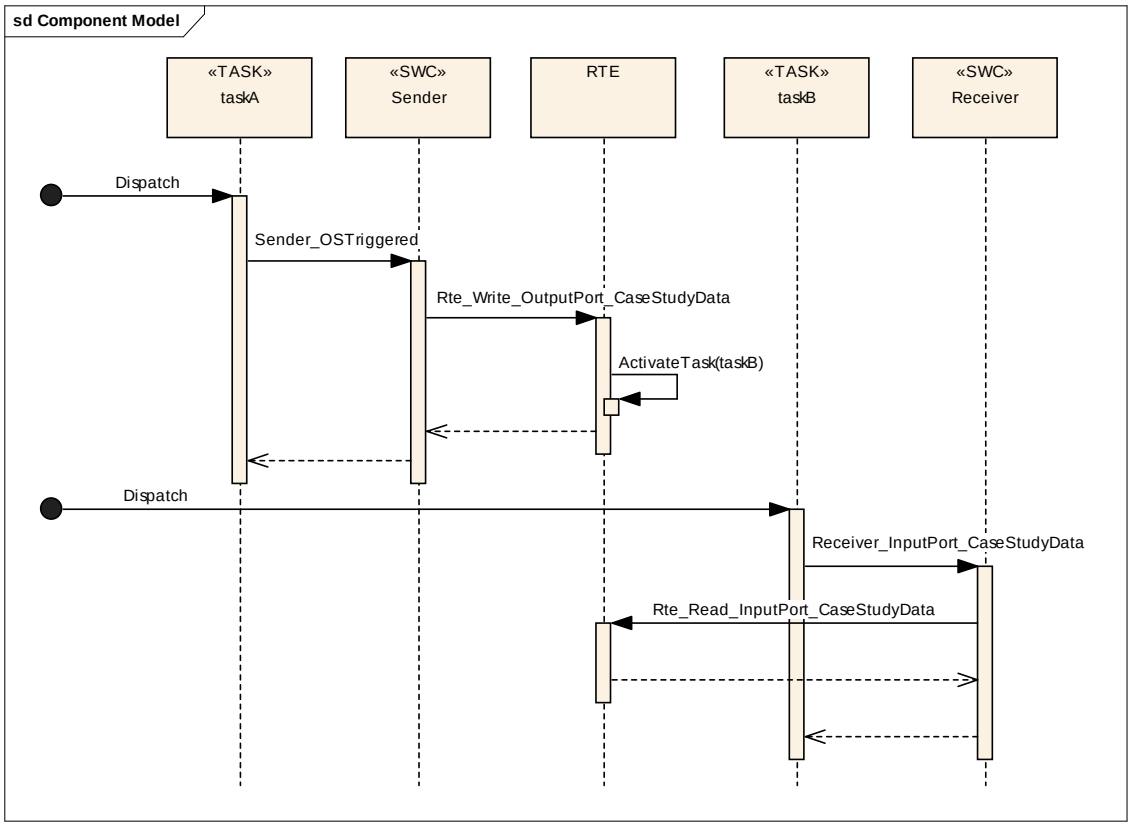

Figure 3.2.Dynamic Behavior of `CaseStudy1` Application

3.2 Installation Contents

The example application is located in `Examples\CaseStudy1`. The folder contains:

- The XML configuration files for the example. These files have the extension `.arxml`.
- The source code for the software components. These files have extension `.c`.
- A DOS batch to run RTA-RTE and generate the RTE for the application.

3.3 Building the application

The RTA-RTE distribution includes a batch file to generate `CaseStudy1`, by using the command:

```
generate_rte.bat
```

> **NOTE**
>
> Building the corresponding executable requires additional components, such as an operating system and target compiler, not included with the RTA-RTE distribution.

3.3.1 RTE Generation

The batch file executes RTEGen with the options in file `project.rte`, approximately equivalent to:

```
RTEGen.exe --rte=auto ECU1.arxml CaseStudy1.arxml
```

The `--rte` option chooses *Rte Generation Phase*. For historical reasons the `--rte` option takes a path to the ECU Instance for which we are generating an RTE. This can usually be set to `auto`, as here. The remaining parameters list the files containing the input configuration.

Please see the RTA-RTE Reference Manual for full documentation of available command-line options.

3.3.2 Generated Files

The RTE generator creates the following files:

`Rte_ReceiverComponent.h`

The component header file for the *Receiver* component type. This file is used when writing and compiling the code for software-component *Receiver*.

`Rte_SenderComponent.h`

The component header file for the *Sender* component type. This file is used when writing and compiling the code for software-component *Sender*.

`Rte_Const.h`

Constants derived from the configuration by RTA-RTE, for example, the rate at which schedules must be ticked.

`Rte_Const.h` is `#include` d by the RTE library, so the library must be rebuilt whenever this file changes.

`Rte_Type.h`

Type definition for AUTOSAR and user types. Used when compiling RTE generated code and application software-components.

`Rte.c`

Generated RTE.

This file contains the implementation of the RTE API and the generated task bodies.

The generated RTE must be compiled and linked with the application.

3.3.3 Quick Check

You can verify that RTA-RTE has generated the code correctly by inspecting `Rte.c`. You should see at least:

- API Function `Rte_Write_SWCI0_OutputPort_CaseStudyData(VAR(uint16, AUTOMATIC) data)`, which
  - Writes its argument to `Rte_Rx_000000`
  - Activates task `taskB`
- Task body `TASK(TaskB)` containing a function call to the receiver runnable `Receiver_InputPort_CaseStudyData`.
- API Function `Rte_Read_SWCI1_InputPort_CaseStudyData(CONSTP2VAR(uint16, AUTOMATIC, RTE_APPL_DATA) data)`, which writes `Rte_Rx_000000` to its OUT parameter.

3.3.4 Integration

To build a running application, you will need a correctly configured AUTOSAR OS running on the target platform. This must be configured to tick `Rte_TickCounter` at the required period, notified to you by message 6910, written during execution of `RTEGen.exe` for the Rte Generation phase.

4 Documentation

RTA-RTE includes the following manuals:

RTA-RTE Getting Started Guide

This manual.

RTA-RTE Release Note

Details of changes to RTA-RTE by version.

RTA-RTE User Guide

This guide describes the underlying principles of RTA-RTE and its features in some detail. It explains how to use AUTOSAR XML to configure RTA-RTE and how to generate AUTOSAR RTEs and to build applications.

RTA-RTE Reference Manual

A complete reference to the AUTOSAR API, the XML configuration of RTA-RTE and command-line options.

The reference manual also includes details of implementation limits and external dependencies.

RTA-RTE Error Reference

A list of the messages that RTA-RTE can raise and some hints on how to diagnose and fix them.

RTA-RTE also references information contained in the AUTOSAR Software Specifications. The appropriate versions of the AUTOSAR specifications are listed in the bibliography this document.

5 ETAS Contact Addresses

5.1 Technical Support

Technical support is available to all RTA-RTE users with a valid support contract. If you do not have a valid support contract, please contact your regional sales office (see below).

The best way to get technical support is by email. Any problems or questions about the use of RTA-RTE should be sent to: rta.hotline@etas.com

If you prefer to discuss your problem with the technical support team, you can call the support hotline on: +44 (0)1904 562624. The hotline is available during normal office hours (0900-1730 GMT/BST).

In either case, when contacting technical support, it is helpful if you can provide as much of the following information (where relevant):

- Your support contract number.
- The versions of the ETAS tools you are using.
- The version of the compiler tool chain you are using.
- The command line (or reproduction of steps) that result in an error message.
- The error messages or return codes you received (if any).
- Your .xml and .arxml files.
- Your OS configuration files.
- The diagnostic.dmp file (if it was generated).

5.2 General Enquiries

5.2.1 ETAS Global Headquarters

ETAS GmbH
Borsigstrasse 24
70469 Stuttgart
Germany

Phone: +49 711 3423-0
Fax: +49 711 3423-2106
www: https://www.etas.com

5.2.2 ETAS Local Sales and Support Offices

Contact details for your local sales office and local technical support team (where available) can be found on the ETAS website:

ETAS subsidiaries: https://www.etas.com/en/contact.php
ETAS technical support: https://www.etas.com/en/hotlines.php